SECTION: 19
TOWNSHIP: 46 S
RANGE: 24 E

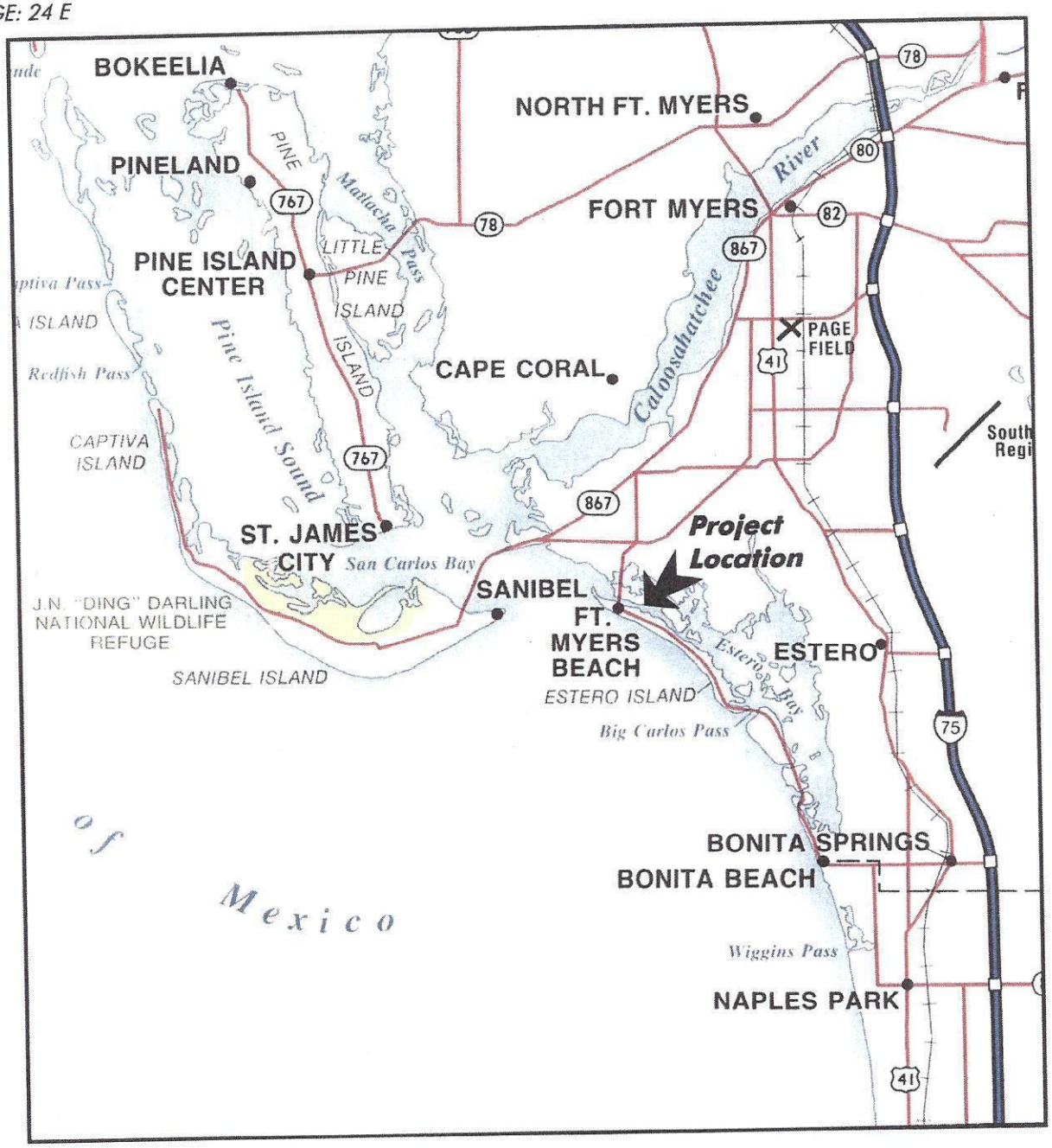

Project Vicinity

SCALE: 1" = 5 mi

May 22, 2015 1:08:09 p.m.
Drawing: FMB7MASTER.DWG

BID PLANS, NOT FOR CONSTRUCTION

HWA Hans Wilson & Associates
1938 Hill Avenue, Fort Myers, Florida 33901
Office: 239-334-6870 Fax: 239-334-7810
MARINE and ENVIRONMENTAL CONSULTANTS

5-22-15

TM

Town of Fort Myers Beach

SHEET

SECTION: 19
TOWNSHIP: 46 S
RANGE: 24 E

0 1500 3000
SCALE FEET

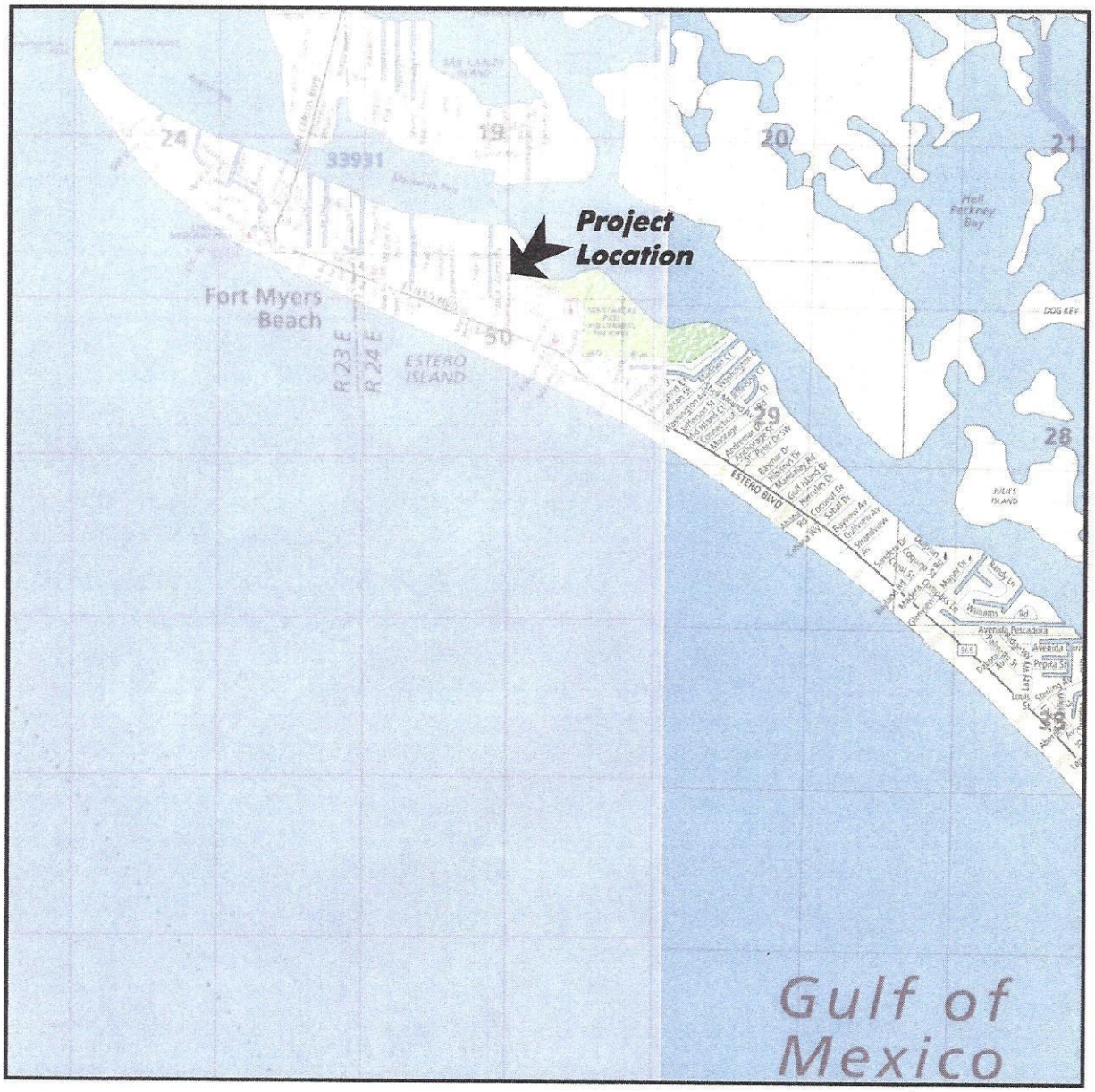

Project Location

SCALE: 1" = 3000'

BID PLANS, NOT FOR CONSTRUCTION

May 22, 2015 1:08:09 p.m.
Drawing: FMB7MASTER.DWG

HWA Hans Wilson & Associates
1938 Hill Avenue, Fort Myers, Florida 33901
Office: 239-334-6870 Fax: 239-334-7810
MARINE and ENVIRONMENTAL CONSULTANTS

5-15-22

TM

Town of Fort Myers Beach

SHEET

SECTION: 19
TOWNSHIP: 46 S
RANGE: 24 E

0 150 300
SCALE FEET

Lee County Aerial 2015

Overall Site Plan

SCALE: 1" = 300'

Note: Property lines obtained from Johnson Engineering Inc. site survey provided by client.

BID PLANS, NOT FOR CONSTRUCTION

May 22, 2015 1:08:09 p.m.
Drawing: FMB7MASTER.DWG

HWA Hans Wilson & Associates
1938 Hill Avenue, Fort Myers, Florida 33901
Office: 239-334-6870 Fax: 239-334-7810
MARINE and ENVIRONMENTAL CONSULTANTS

5-22-15

TM

Town of Fort Myers Beach

SHEET

SECTION: 19
TOWNSHIP: 46 S
RANGE: 24 E

0 15 30
SCALE FEET

Lee County Aerial 2015

Existing Site Plan

SCALE: 1" = 30'

Note: Property lines obtained from Johnson Engineering Inc. site survey provided by client.

BID PLANS, NOT FOR CONSTRUCTION

May 22, 2015 1:08:09 p.m.
Drawing: FMB7MASTER.DWG

HWA Hans Wilson & Associates
1938 Hill Avenue, Fort Myers, Florida 33901
Office: 239-334-6870 Fax: 239-334-7810
MARINE and ENVIRONMENTAL CONSULTANTS

5-22-15

TM

Town of Fort Myers Beach

SHEET

SECTION: 19
TOWNSHIP: 46 S
RANGE: 24 E

0 15 30
SCALE FEET

Lee County Aerial 2015

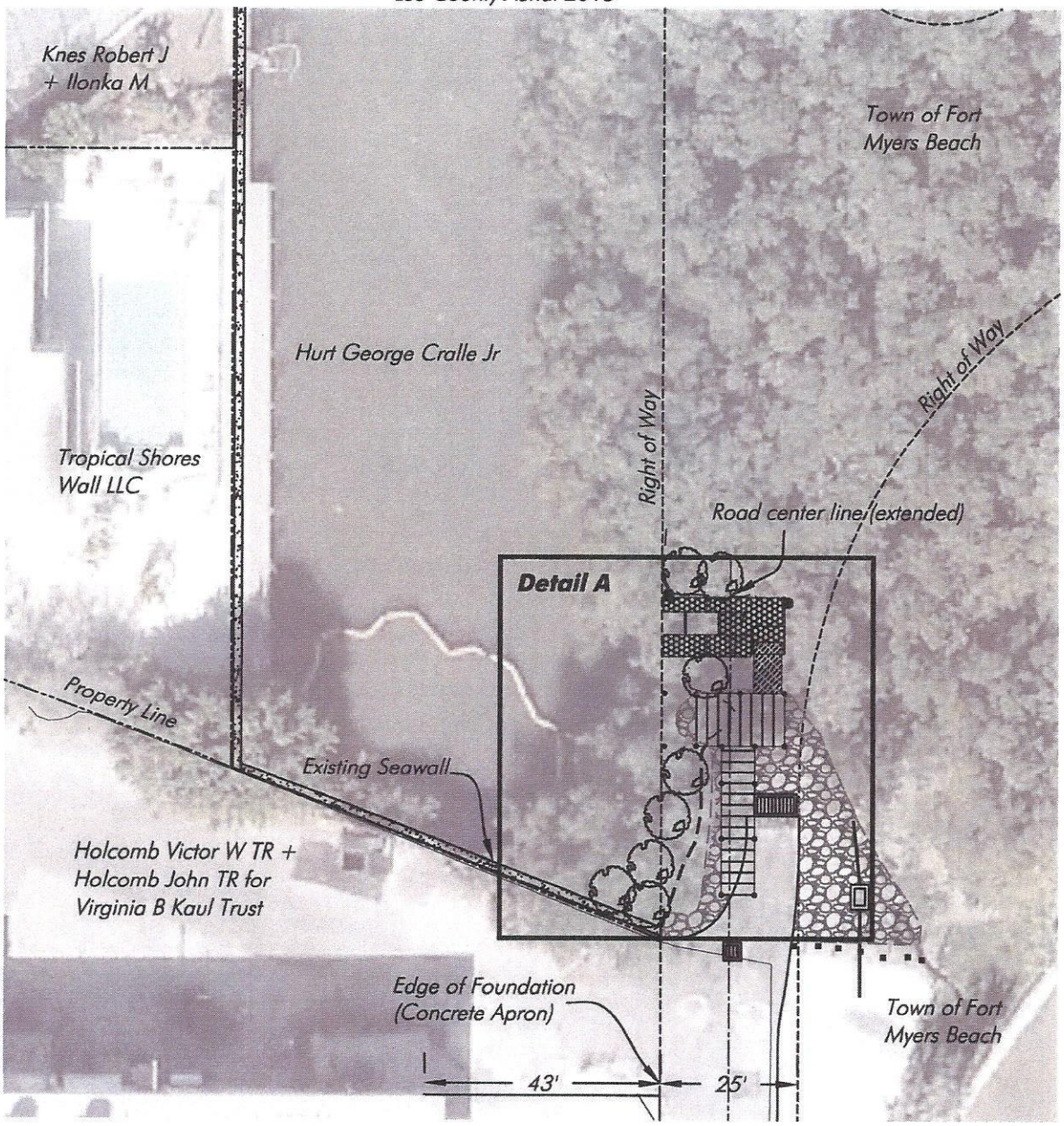

Proposed Site Plan

SCALE: 1" = 30'

Note: Property lines obtained from Johnson Engineering Inc. site survey provided by client.

BID PLANS, NOT FOR CONSTRUCTION

May 22, 2015 1:08:09 p.m.
Drawing: FMB7MASTER.DWG

HWA Hans Wilson & Associates 1938 Hill Avenue, Fort Myers, Florida 33901 Office: 239-334-6870 Fax: 239-334-7810 MARINE and ENVIRONMENTAL CONSULTANTS	5-22-15 TM	Town of Fort Myers Beach	SHEET

SECTION: 19
TOWNSHIP: 46 S
RANGE: 24 E

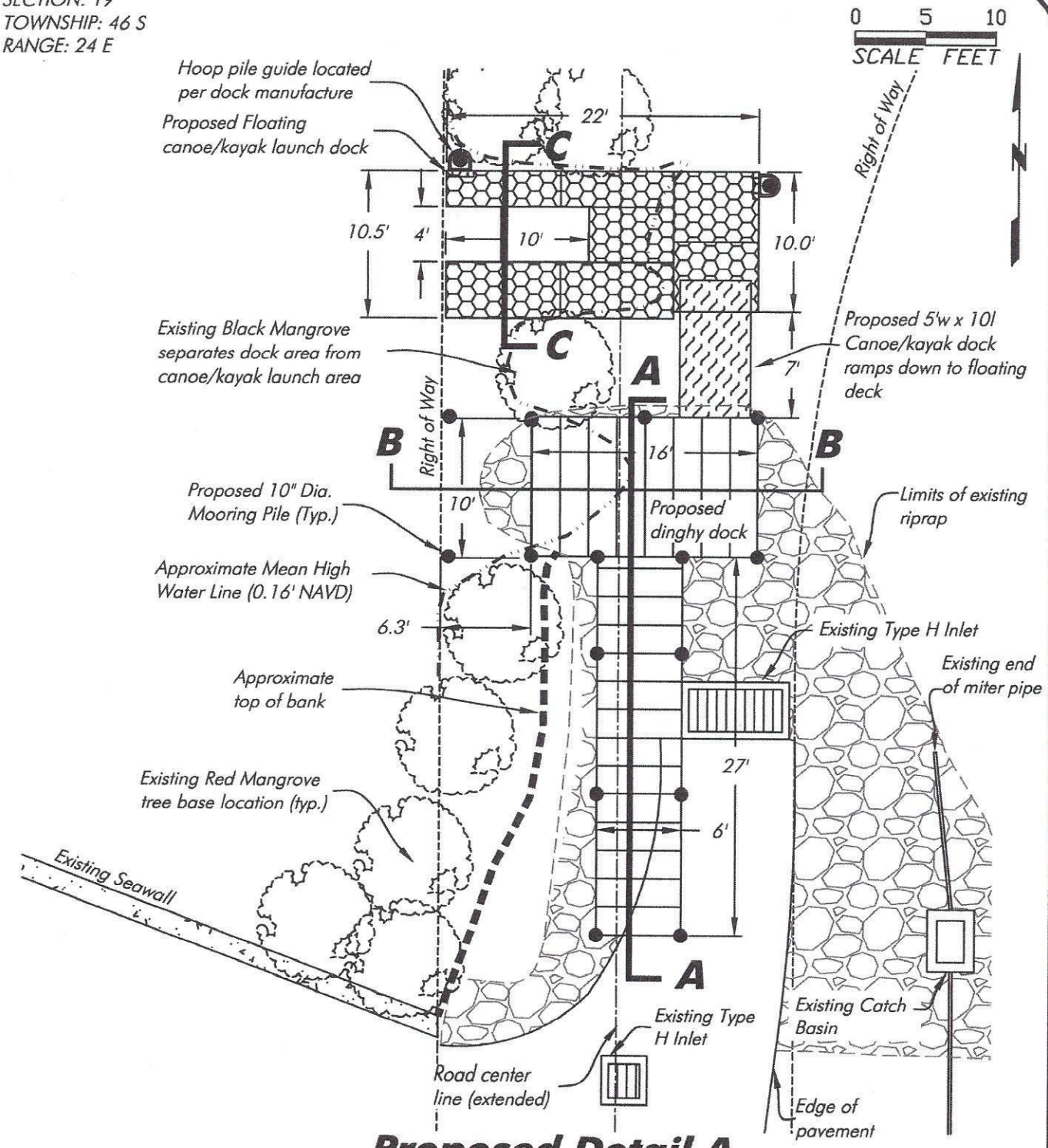

Proposed Detail A

SCALE: 1" = 10'

Note: Property lines obtained from Johnson Engineering Inc. site survey provided by client.

BID PLANS, NOT FOR CONSTRUCTION

May 22, 2015 1:08:09 p.m.
Drawing: FMB7MASTER.DWG

HWA Hans Wilson & Associates
1938 Hill Avenue, Fort Myers, Florida 33901
Office: 239-334-6870 Fax: 239-334-7810
MARINE and ENVIRONMENTAL CONSULTANTS

5-22-15

TM

Town of Fort Myers Beach

SHEET

SECTION: 19
TOWNSHIP: 46 S
RANGE: 24 E

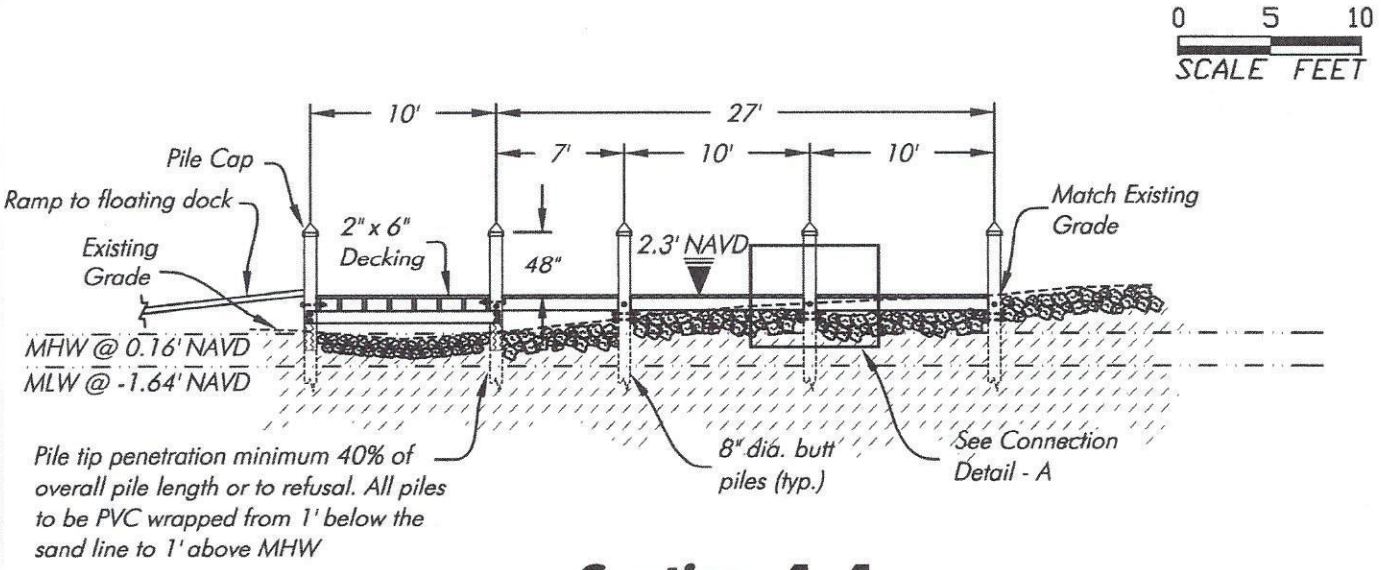

Section A-A

SCALE: 1" = 10'

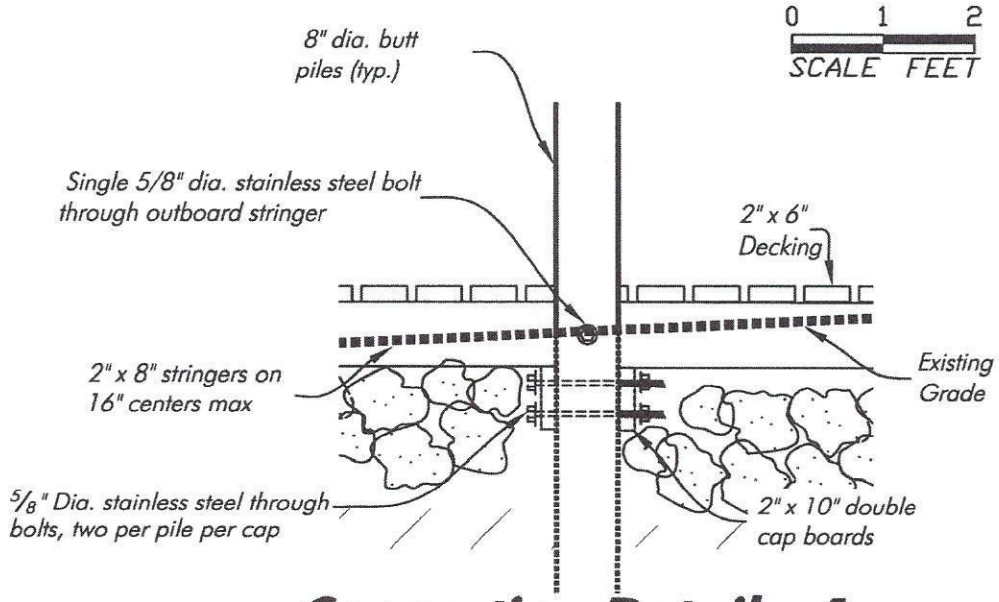

Connection Detail - A

SCALE: 1" = 2'

Note: Property lines obtained from Johnson Engineering Inc. site survey provided by client

BID PLANS, NOT FOR CONSTRUCTION

May 22, 2015 1:08:09 p.m.
Drawing: FMB7MASTER.DWG

HWA Hans Wilson & Associates
1938 Hill Avenue, Fort Myers, Florida 33901
Office: 239-334-6870 Fax: 239-334-7810
MARINE and ENVIRONMENTAL CONSULTANTS

5-22-15

TM

Town of Fort Myers Beach

SHEET

SECTION: 19
TOWNSHIP: 46 S
RANGE: 24 E

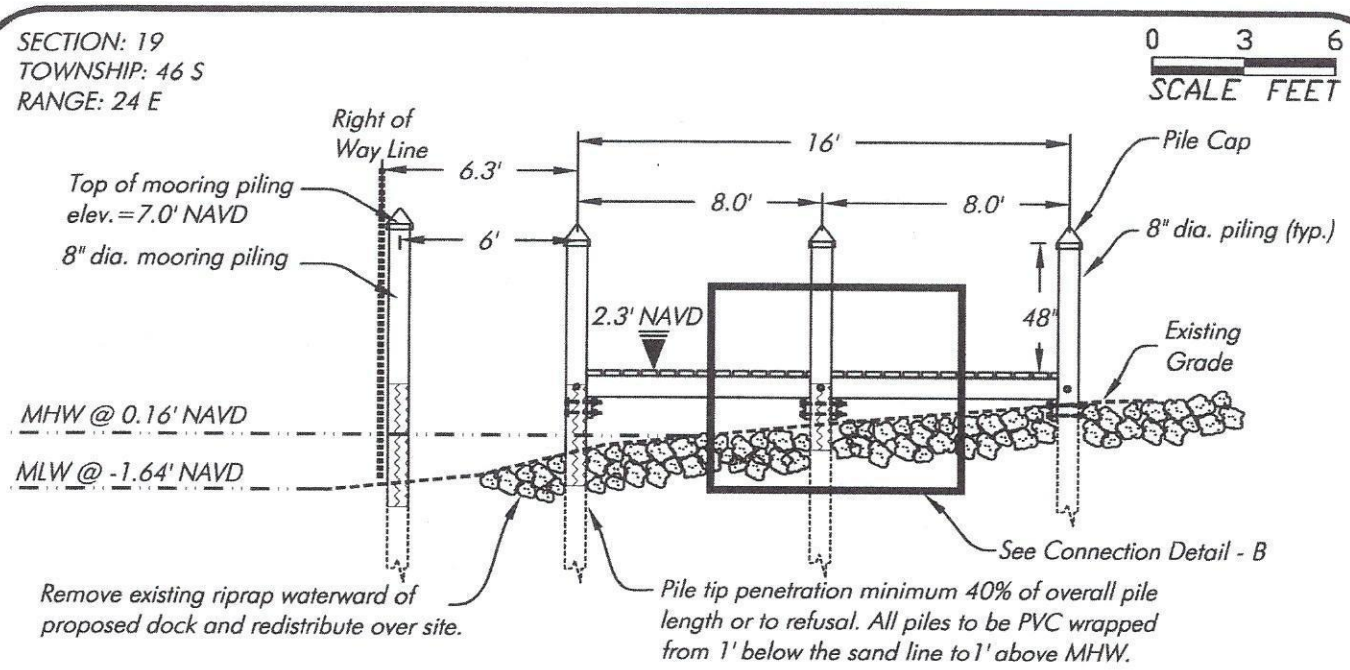

Section B-B

SCALE: 1" = 6'

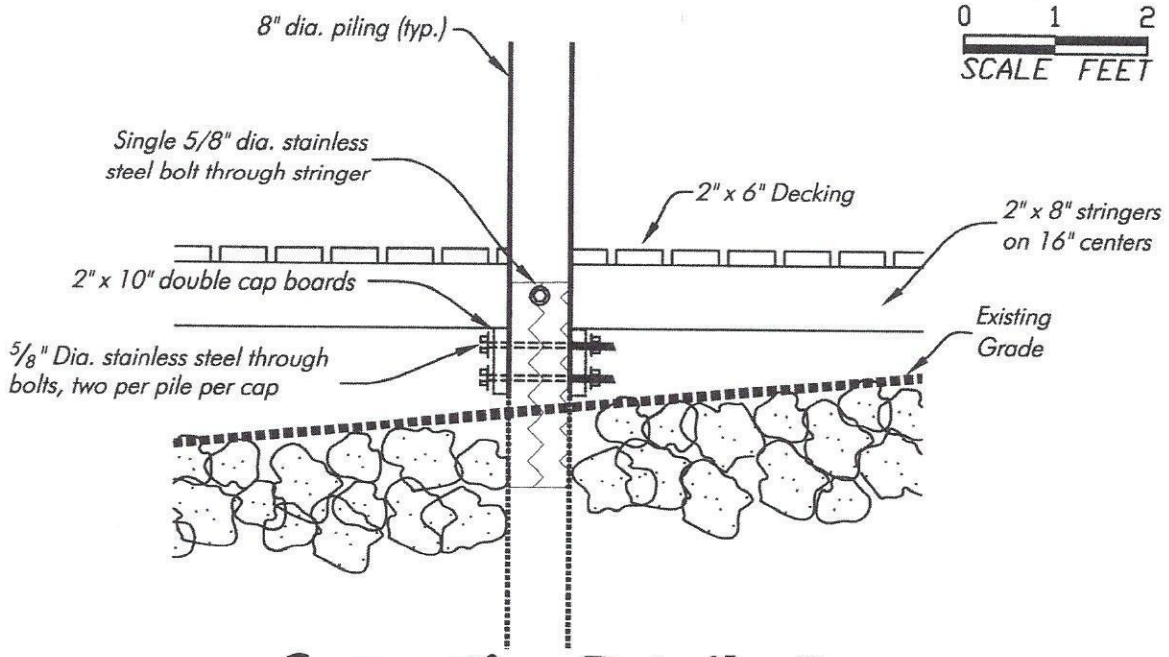

Connection Detail - B

SCALE: 1" = 2'

Note: Property lines obtained from Johnson Engineering Inc. site survey provided by client.

BID PLANS, NOT FOR CONSTRUCTION

May 22, 2015 1:08:09 p.m.
Drawing: FMB7MASTER.DWG

HWA Hans Wilson & Associates
1938 Hill Avenue, Fort Myers, Florida 33901
Office: 239-334-6870 Fax: 239-334-7810
MARINE and ENVIRONMENTAL CONSULTANTS

5-22-15

TM

Town of Fort Myers Beach

SHEET

SECTION: 19
TOWNSHIP: 46 S
RANGE: 24 E

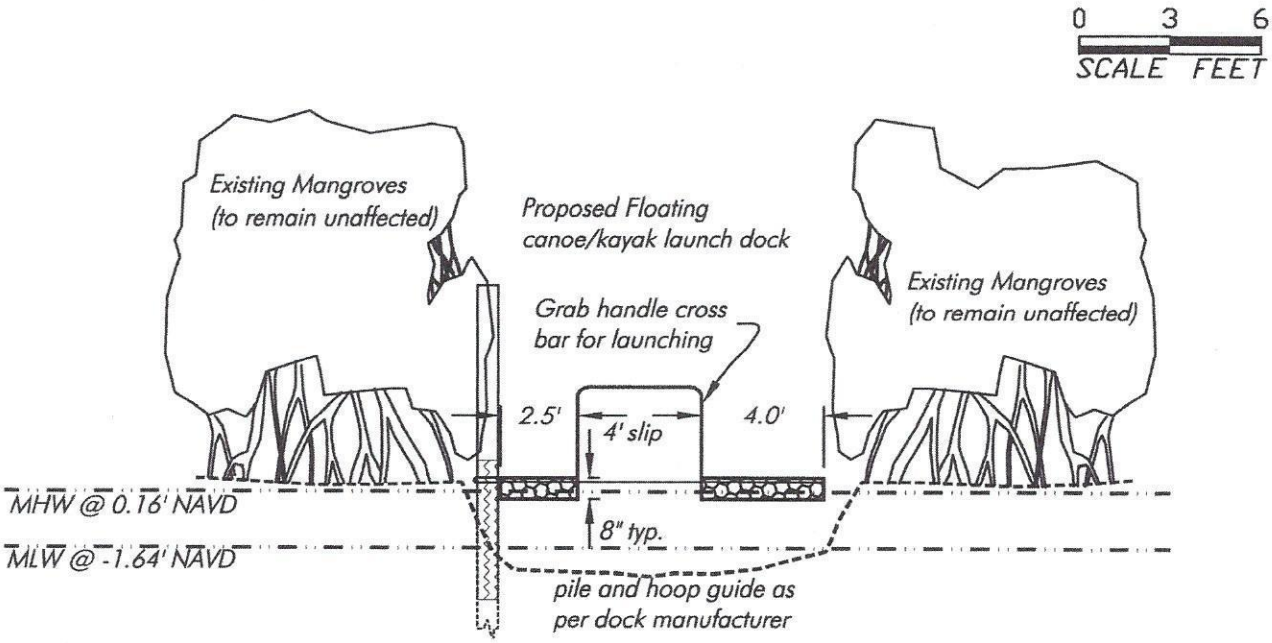

Section C-C

SCALE: 1" = 6'

Note: Property lines obtained from Johnson Engineering Inc. site survey provided by client.

BID PLANS, NOT FOR CONSTRUCTION

May 22, 2015 1:08:09 p.m.
Drawing: FMB7MASTER.DWG

HWA Hans Wilson & Associates
1938 Hill Avenue, Fort Myers, Florida 33901
Office: 239-334-6870 Fax: 239-334-7810
MARINE and ENVIRONMENTAL CONSULTANTS

5-22-15

tm

Town of Fort Myers Beach

SHEET